DT018ATFT RGB Reference Design

(RGB 18-BIT WITH SERIAL DATA CONFIGURATION)

DISPLAY LOGIC POWER

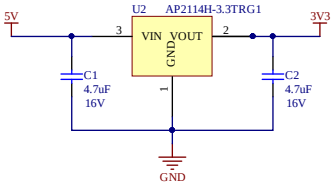

THESE SERIAL DATA SIGNALS ARE NOT FULLY COMPATIBLE WITH STANDARD SPI DATA PROTOCOLS. CUSTOM DRIVERS ARE NEEDED TO USE SPI HARDWARE PORTS.

A BIT-BANGED IMPLEMENTATION IS AVAILABLE IN THE SAMPLE DRIVER CODE.

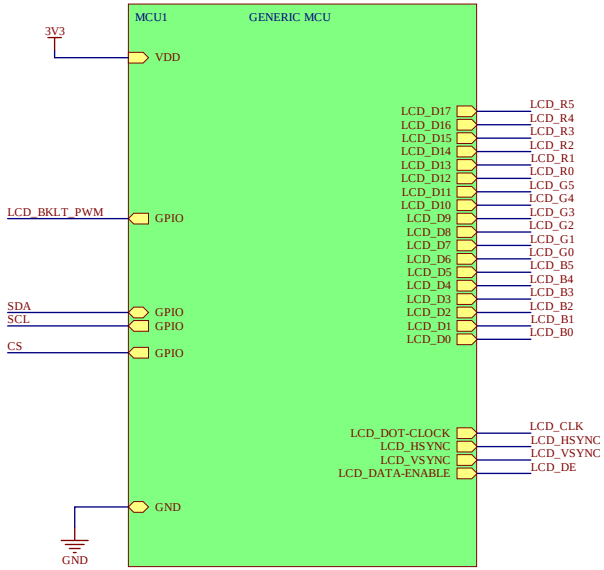

CONSULT THE DATA SHEET FOR THE PARTICULAR MCU CHOSEN TO ENSURE THE LCD DATA CONNECTIONS ARE THE SAME AS THIS EXAMPLE.

RGB 16-BIT AND 8-BIT RGB OPERATION ARE ALSO POSSIBLE. SEE THE MCU AND ILI9163 DRIVER DATA SHEETS FOR PROPER CONNECTIONS.

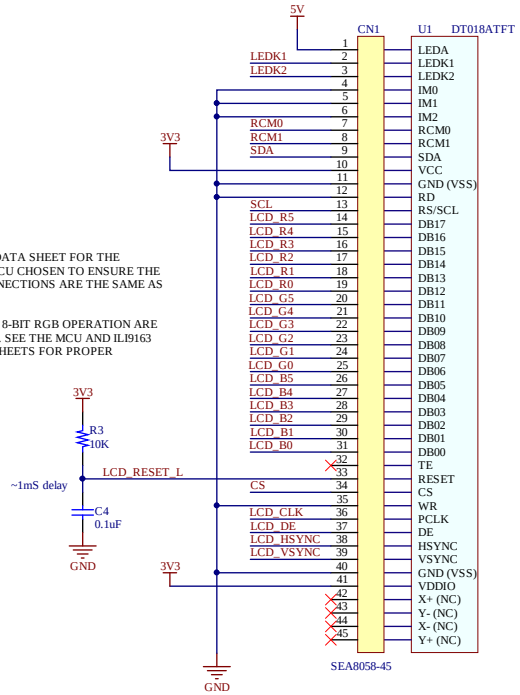

DISPLAY

LED DRIVER

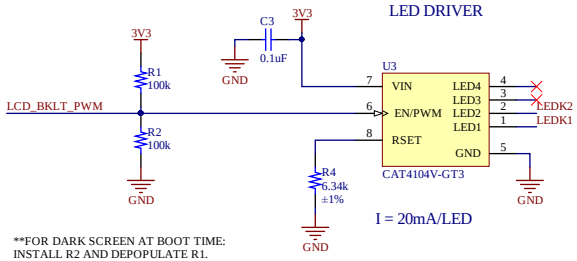

I = 20mA/LED

**FOR DARK SCREEN AT BOOT TIME:
INSTALL R2 AND DEPOPULATE R1.
**FOR NORMAL SCREEN AT BOOT TIME:
INSTALL R1 AND DEPOPULATE R2.

FOR DE MODE: RCM1 = 1, RCM0 = 0.
FOR VSYNC MODE: RCM1 = 1, RCM0 = 1.

LOGIC 1 = VDD (3.3V)
LOGIC 0 = GND

DT018ATFT IS 3-WIRE 9-BIT SERIAL ONLY. CONNECT WR (D/CX) TO GROUND.

CHIP SELECT (CS) SIGNAL IS USED IN SERIAL MODE TO INITIATE A DATA TRANSFER SEQUENCE.

THE DIFFERENCE BETWEEN 3-WIRE AND 4-WIRE SERIAL IS THE HANDLING OF THE DATA/COMMAND SIGNAL (D/CX). 3-WIRE SERIAL SENDS THE D/CX SIGNAL IN A 9TH DATA BIT. 4-WIRE SERIAL USES A SEPARATE WIRE FOR THE D/CX SIGNAL. THERE IS NO RELATIONSHIP WITH THE PHYSICAL NUMBER OF WIRES USED.

Project: DT018ATFT Reference Design			Displaytech a seacomp company
Title: DT018ATFT RGB Reference Design			
Size A3	Doc Number: 1	Revision: REVA1	Drawn By: RCG
Date: 2/10/2020	Time: 3:17:39 PM	Sheet: 1 of 1	Approved:
File: DT018ATFT_RGB.SchDoc			Date:

SEACOMP Displaytech
2546 Gateway Road
Carlsbad, CA 92009 USA